成大 齒輪

CHENTA GEAR

CHENTA PRECISION MACHINERY IND.INC.

SHAFT MOUNT GEAR REDUCERS

SERIES

▲ HORIZONTAL APPLICATIONS

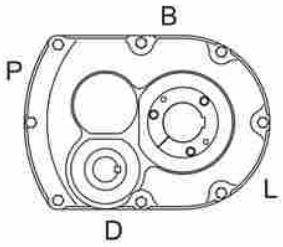

A-POSITION

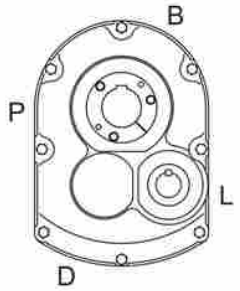

B-POSITION

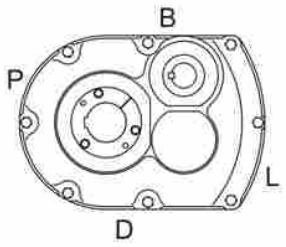

C-POSITION

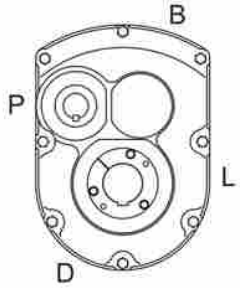

D-POSITION

B : Breather D : Drain L : Level P : Plug

▲ VERTICAL MOUNT

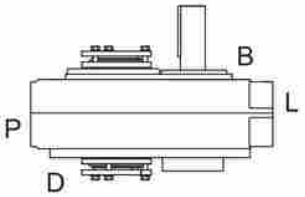

E-POSITION

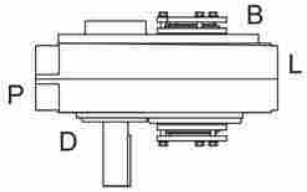

F-POSITION

Oil Volume Recommendations (Liters)						
SIZE	**A**	**B**	**C**	**D**	**E**	**F**
2	0.9	0.85	0.65	0.95	1.6	1.7
3	1.4	1.4	1.1	1.4	2.7	2.9
4	1.9	2.2	1.3	1.8	3.8	4.2
5	3.7	4.2	3.4	4	7	7.5
6	6.3	6.6	5.6	6.5	12	12.9
7	7.5	8	7.5	10	17	18
8	10	11	11.2	11	22	22
9	12	12.1	12	13.9	24	25

SMR Oil Volume				
SIZE	-9° To 16°C		10° To 50°C	
	Mobil SHC 629	Mobil SHC 630	Mobil SHC 630	Mobil SHC 632
AGMA Rating	4	5	5	6
ISO Grade	150	220	220	320
2	N/A	1-140 RPM	N/A	1-140 RPM
3	N/A	1-140 RPM	N/A	1-140 RPM
4	126-140 RPM	1-125 RPM	126-140 RPM	1-125 RPM
5	101-125 RPM	1-100 RPM	101-125 RPM	1-100 RPM
6	101-125 RPM	1-100 RPM	101-125 RPM	1-100 RPM
7	41-74 RPM	1-40 RPM	41-74 RPM	1-40 RPM
8	41-70 RPM	1-40 RPM	41-70 RPM	1-40 RPM
9	41-50 RPM	1-40 RPM	41-50 RPM	1-40 RPM

MAX / Power Ratings Input HP

Power Rating Ratio 1 : 13 & 1 : 20 (Unit) HP

OUTPUT RPM	SIZE 2	SIZE 3	SIZE 4	SIZE 5	SIZE 6	SIZE 7	SIZE 8	SIZE 9	OUTPUT RPM
4	0.57	0.95	1.47	2.29	3.60	5.87	9.59	14.16	4
6	0.82	1.34	2.12	3.28	5.16	8.43	13.76	20.29	6
8	1.08	1.67	2.73	4.25	6.66	10.88	17.76	26.22	8
10	1.31	2.02	3.33	5.16	8.13	13.26	21.66	31.63	10
12	1.56	2.34	3.96	5.97	9.67	15.78	25.77	36.68	12
14	1.82	2.64	4.62	6.78	11.28	18.42	29.96	41.59	14
16	2.08	2.95	5.29	7.55	12.89	20.58	33.40	46.37	16
18	2.33	3.24	5.86	8.31	14.50	22.66	36.76	51.05	18
20	2.55	3.53	6.38	9.05	16.12	24.69	40.06	55.64	20
22	2.75	3.82	6.90	9.78	17.68	26.68	43.31	60.15	22
24	2.94	4.09	7.40	10.50	18.99	28.65	46.50	64.59	24
26	3.15	4.37	7.91	11.20	20.27	30.59	49.64	68.95	26
28	3.33	4.64	8.39	11.90	21.54	32.49	52.74	73.28	28
30	3.53	4.91	8.87	12.59	22.78	34.38	55.81	77.54	30
32	3.72	5.17	9.35	13.27	24.01	36.24	58.83	81.77	32
34	3.91	5.43	9.83	13.95	25.23	38.09	61.84	85.94	34
38	4.27	5.95	10.75	15.27	27.64	41.72	67.74	94.16	38
40	4.46	6.20	11.22	15.92	28.83	43.51	70.66	98.22	40
45	4.91	6.83	12.36	17.55	31.74	47.93	77.84	108.22	45
46	5.01	6.95	12.58	17.85	32.32	48.79	79.26	110.19	46
50	5.35	7.44	13.47	19.12	34.60	52.25	84.89	118.04	50
52	5.53	7.69	13.90	19.75	35.74	53.97	87.68		52
54	5.70	7.93	14.43	20.36	36.86	55.66	90.45		54
58	6.04	8.40	15.20	21.59	39.08	59.04	95.93		58
62	6.39	8.87	16.05	22.81	41.29	62.36	101.36		62
66	6.71	9.34	16.90	24.01	43.46	65.66	106.73		66
70	7.04	9.80	17.73	25.22	45.61	68.93	112.05		70
74	7.37	10.36	18.73	26.70	47.74	72.16			74
78	7.70	10.94	19.76	28.16	50.33				78
80	7.86	11.22	20.28	28.91	51.65				80
85	8.35	11.93	21.58	30.76	54.96				85
90	8.85	12.66	22.88	32.61	58.27				90
95	9.35	13.37	24.17	34.46	61.60				95
100	9.86	14.08	25.48	36.32	64.93				100
105	10.37	14.82	26.78	38.19	68.26				105
110	10.87	15.53	28.08	40.04	71.59				110
115	11.37	16.25	29.39	41.91	74.94				115
120	11.88	16.98	30.69	43.79	78.28				120
125	12.38	17.70	32.01	45.67	81.65				125
130	12.89	18.43	33.32						130
135	13.40	19.15	34.63						135
140	13.90	19.89	35.94						140

Output Torque Rating

(Unit) kgm

OUTPUT RPM	SIZE 2	SIZE 3	SIZE 4	SIZE 5	SIZE 6	SIZE 7	SIZE 8	SIZE 9	OUTPUT RPM
4	93	155	239	373	586	956	1562	2304	4
6	89.5	145	230	356	560	915	1493	2202	6
8	87.7	136	222	346	542	886	1446	2134	8
10	85.1	131	217	336	529	863	1410	2060	10
12	84.4	127	215	324	525	856	1398	1990	12
14	84.6	123	215	315	525	857	1393	1935	14
16	84.6	120	215	307	525	838	1359	1887	16
18	84.2	117	212	301	525	820	1330	1847	18
20	82.9	115	208	295	525	804	1304	1811	20
22	81.4	113	204	290	523	790	1282	1780	22
24	79.8	111	201	285	515	777	1261	1752	24
26	78.8	109	198	281	508	766	1243	1727	26
28	77.5	108	195	277	501	756	1227	1704	28
30	76.6	106	193	273	495	746	1211	1683	30
32	75.7	105	190	270	489	737	1197	1664	32
34	75	104	188	267	483	729	1184	1646	34
38	73.2	102	184	262	474	715	1161	1613	38
40	72.5	101	183	259	469	708	1150	1599	40
45	71.1	98.8	179	254	459	693	1126	1566	45
46	70.9	98.4	178	253	457	691	1122	1560	46
50	69.7	96.9	175	249	451	680	1106	1537	50
52	69.2	96.2	174	247	447	676	1098	1527	52
54	68.7	95.6	173	246	444	671	1091		54
58	67.9	94.3	171	242	439	663	1077		58
62	67.1	93.2	169	240	434	655	1064		62
66	66.2	92.2	167	237	429	648	1053		66
70	65.5	91.2	165	235	424	641	1042		70
74	64.9	91.1	165	235	420	635			74
78	64.3	91.3	165	235	420				78
80	64	91.3	165	235	420				80
85	64	91.4	165	236	421				85
90	64	91.6	166	236	422				90
95	64.1	91.7	166	236	422				95
100	64.2	91.7	166	237	423				100
105	64.3	91.9	166	237	423				105
110	64.3	91.9	166	237	424				110
115	64.4	92	166	237	424				115
120	64.4	92.1	167	238	425				120
125	64.5	92.2	167	238	425				125
130	64.6	92.3	167						130
135	64.6	92.4	167						135
140	64.7	92.5	167						140

Actual Ratio and Input RPM

(rpm)

OUTPUT RPM	SIZE 2		SIZE 3		SIZE 4		SIZE 5		SIZE 6		SIZE 7		SIZE 8		SIZE 9	
	13.6	20.48	13.5	20.47	13.5	20.66	13.49	20.42	13.58	20.52	13.59	20.6	13.64	20.4	13.68	20.34
4	54	82	54	82	54	83	54	82	54	82	54	82	55	82	55	81
6	82	123	81	123	81	124	81	123	81	123	82	124	82	122	82	122
8	109	164	108	164	108	165	108	163	109	164	109	165	109	163	109	163
10	136	205	135	205	135	207	135	204	136	205	136	206	136	204	137	203
12	163	246	162	246	162	248	162	245	163	246	163	247	164	245	164	244
14	190	287	189	287	189	289	189	286	190	287	190	288	191	286	192	285
16	218	328	216	328	216	331	216	327	217	328	217	330	218	326	219	325
18	245	369	243	368	243	372	243	368	244	369	245	371	246	367	246	366
20	272	410	270	409	270	413	270	408	272	410	272	412	273	408	274	407
22	299	451	297	450	297	455	297	449	299	451	299	453	300	449	301	447
24	326	492	324	491	324	496	324	490	326	492	326	494	327	490	328	488
26	354	532	351	532	351	537	351	531	353	534	353	536	355	530	356	529
28	381	573	378	573	378	578	378	572	380	575	380	577	382	571	383	569
30	408	614	405	614	405	620	405	613	407	616	408	618	409	612	410	610
32	435	655	432	655	432	661	432	653	435	657	435	659	436	653	438	651
34	462	696	459	696	459	702	459	694	462	698	462	700	464	694	465	692
38	517	778	513	778	513	785	513	776	516	780	516	783	518	775	520	773
40	544	819	540	819	540	826	540	817	543	821	544	824	546	816	547	814
45	612	922	608	921	608	930	607	919	611	923	612	927	614	918	616	915
46	626	942	621	942	621	950	621	939	625	944	625	948	627	938	629	936
50	680	1024	675	1024	675	1033	675	1021	679	1026	680	1030	682	1020	684	1017
52	707	1065	702	1064	702	1074	701	1062	706	1067	707	1071	709	1061	711	1058
54	734	1106	729	1105	729	1116	728	1103	733	1108	734	1112	737	1102	739	1098
58	789	1188	783	1187	783	1198	782	1184	788	1190	788	1195	791	1183	793	1180
62	843	1270	837	1269	837	1281	836	1266	842	1272	843	1277	846	1265	848	1261
66	898	1352	891	1351	891	1364	890	1348	896	1354	897	1360	900	1346	903	1342
70	952	1434	945	1433	945	1446	944	1429	951	1436	951	1442	955	1428	958	1424
74	1006	1516	999	1515	999	1529	998	1511	1005	1518	1006	1524	1009	1510	1012	1505
78	1061	1597	1053	1597	1053	1611	1052	1593	1059	1601	1060	1607	1064	1591	1067	1587
80	1088	1638	1080	1638	1080	1653	1079	1634	1086	1642	1087	1648	1091	1632	1094	1627
85	1156	1741	1148	1740	1148	1756	1147	1736	1154	1744	1155	1751	1159	1734	1163	1729
90	1224	1843	1215	1842	1215	1859	1214	1838	1222	1847	1223	1854	1228	1836	1231	1831
95	1292	1946	1283	1945	1283	1963	1282	1940	1290	1949	1291	1957	1296	1938	1300	1932
100	1360	2048	1350	2047	1350	2066	1349	2042	1358	2052	1359	2060	1364	2040	1368	2034
105	1428	2150	1418	2149	1418	2169	1416	2144	1426	2155	1427	2163	1432	2142	1436	2136
110	1496	2253	1485	2252	1485	2273	1484	2246	1494	2257	1495	2266	1500	2244	1505	2237
115	1564	2355	1553	2354	1553	2376	1551	2348	1562	2360	1563	2369	1569	2346	1573	2339
120	1632	2458	1620	2456	1620	2479	1619	2450	1630	2462	1631	2472	1637	2448	1642	2441
125	1700	2560	1688	2559	1688	2583	1686	2553	1698	2565	1699	2575	1705	2550	1710	2543
130	1768	2662	1755	2661	1755	2686	1754	2655	1765	2668	1767	2678	1773	2652	1778	2644
135	1836	2765	1823	2763	1823	2789	1821	2757	1833	2770	1835	2781	1841	2754	1847	2746
140	1904	2867	1890	2866	1890	2892	1889	2859	1901	2873	1903	2884	1910	2856	1915	2848

Dimensions

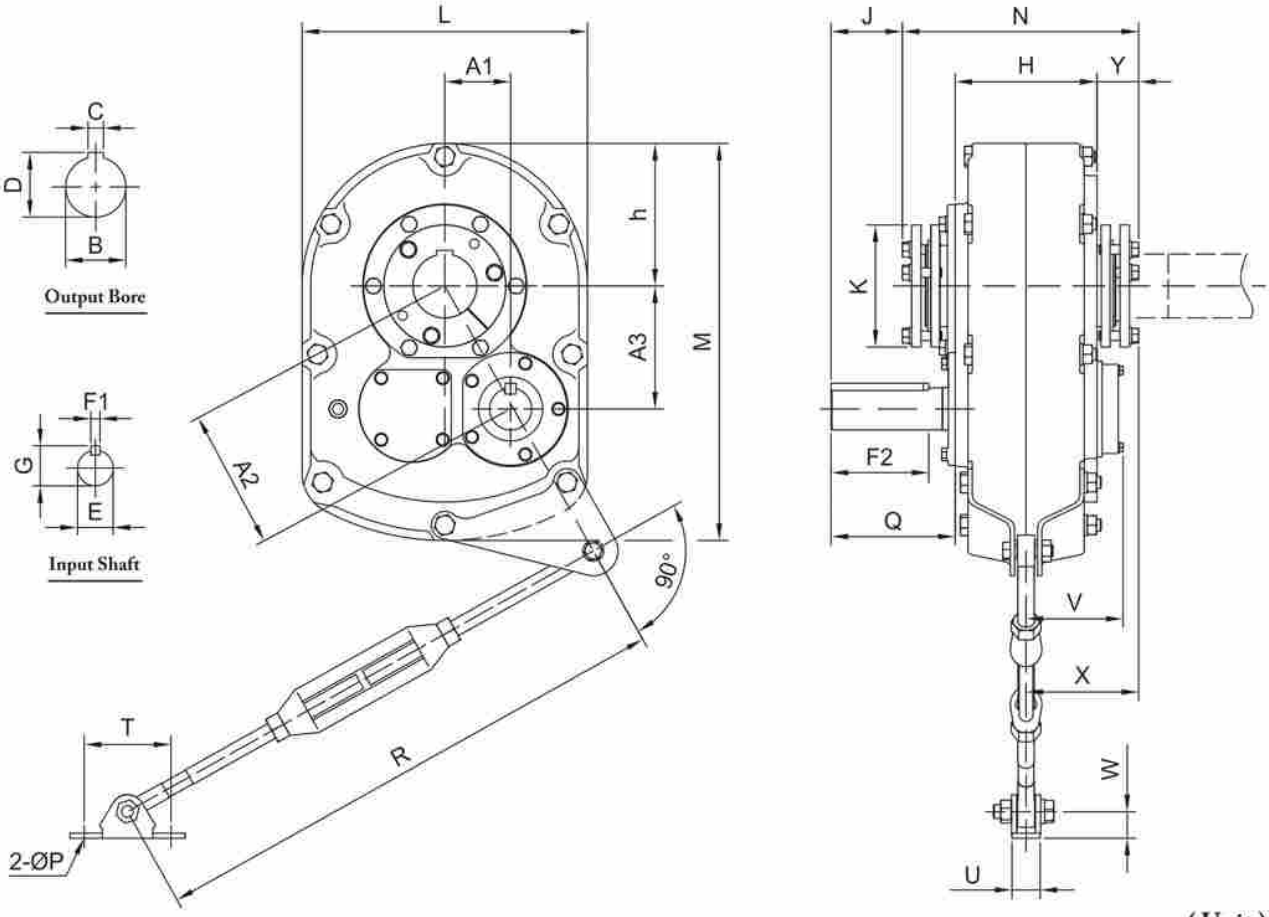

(Unit) mm

SIZE	A1	A2	A3	B	C	D	E	F1	F2	G	h	H	J	K	L
2	54	109.7	95.5	40	12	43.2	22	6	60	24.4	104	116	54.6	103	213
3	59.4	121.4	106	50	16	59.2	25	8	70	28	123	143	58.7	111	235
				55			28			31					
4	70	140.4	121.7	65	18	69.3	32	10	70	36	140	162	82.8	122	264
5	77	163.3	144	75	20	80	42	12	90	45	167	166	83.6	143	334
6	104	200	171	85	22	90.4	48	14	100	51.6	192	187	91	155	384
7	130	247.4	211	100	28	106.4	55	16	100	59	238	187	85	184	476
8	153	285.8	241	100	28	106.4	55	16	140	59	257	215	103	198	514
9	167	321.6	274.6	125	32	132.3	60	18	190	64	288	210	165	220	575

SIZE	M	N	P	Q	R min	R max	T	U	V	W	X	Y	Weight (kg)
2	290	189	13	91	684	837	76.2	28	73	27	95	36.6	25
3	327	238	13	110	684	837	76.2	28	88.7	27	120	43.2	40
4	385	261	17	137	741	894	102	34	102	31.2	132	45.2	60
5	465	277	17	145	741	894	102	34	114	31.2	132	48.8	82
6	542	299	17	153	741	894	121	70	133	50.8	147	49.3	127
7	659	339	17	161	748	900	121	70	116	50.8	170	76.5	170
8	718	370	21	181	762	914	178	102	150	80	187	77.7	250
9	805	374	21	245	762	914	178	102	156	80	191	84.6	340

Accessories Kits

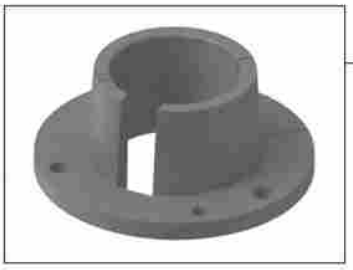

Tappered Bushing Kits

Twin tappared bushing kits are perfectly sized for worldwide shaft mount reducers (as well as other manufacturers) and assures you of fast and simple installation, as well as reliable tappered support on both sides of the reducer.

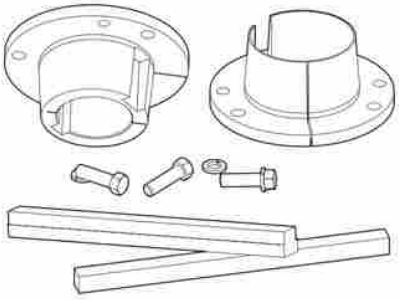

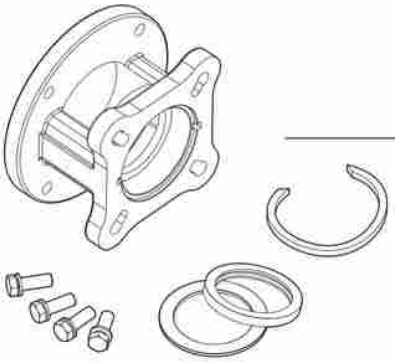

CEMA Adapter

are engineered to CEMA dimensions. Adapter features double-lip seals on both sealing surfaces.

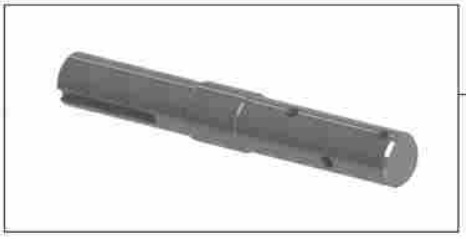

CEMA Drive Shaft

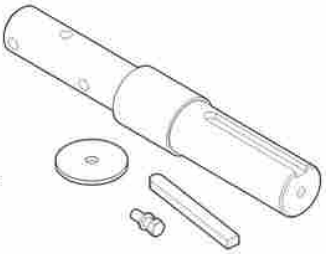

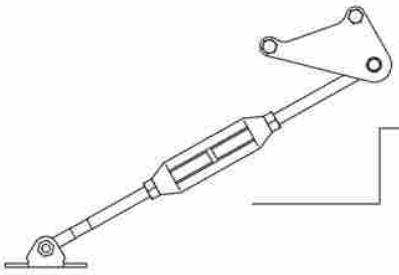

Torque Arm

Kit with brackets for universal mounting.

Backstop Assemblies

Universal backstop assemblies for shaft mount ensure smooth, forward operation of conveyor with no backslip.

Assemblies - Backstop

For box size : 2, 3, 4, 5

1. Bolts
2. End Cover
3. Backstop
4. Key
5. Gasket

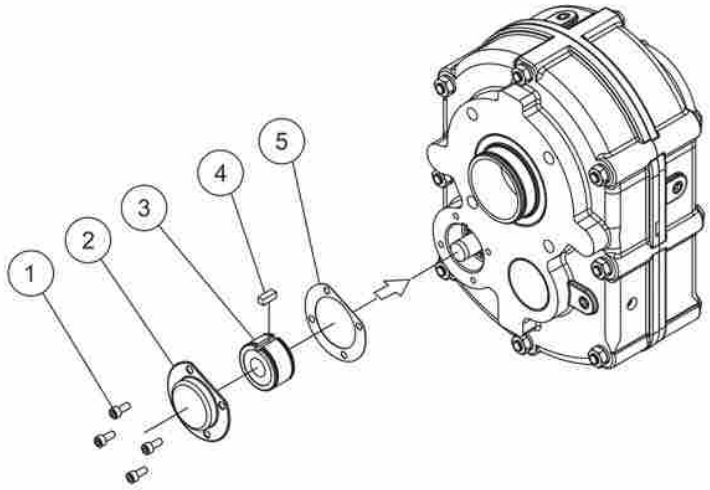

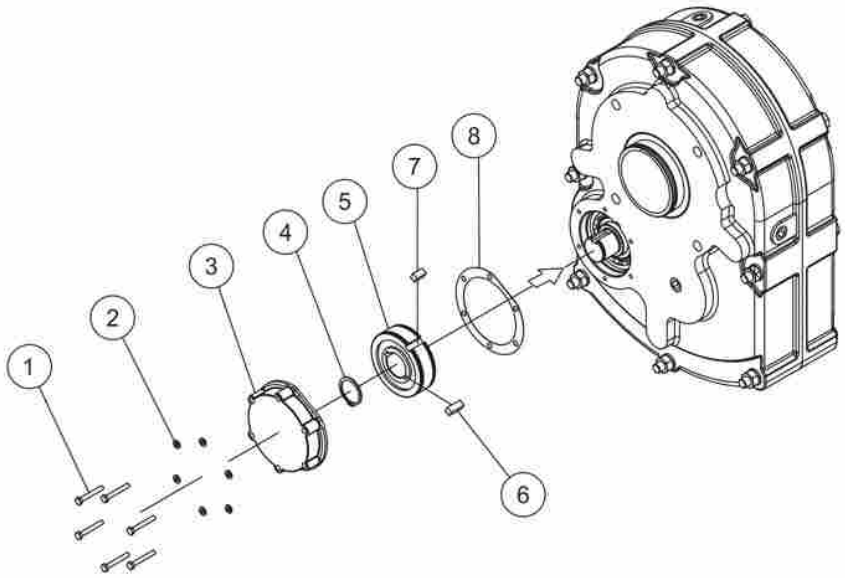

For box size : 6, 7, 8

1. Bolts
2. Spring Washer
3. End Cover
4. C-clip (for size 6 only)
5. Backstop
6. Key (inner)
7. Key (outer)
8. Gasket

For box size : 9

1. Bolts
2. Spring Washer
3. End Cover
4. Backstop
5. Key (outer)
6. Key (inner)
7. C-clip
8. Gasket

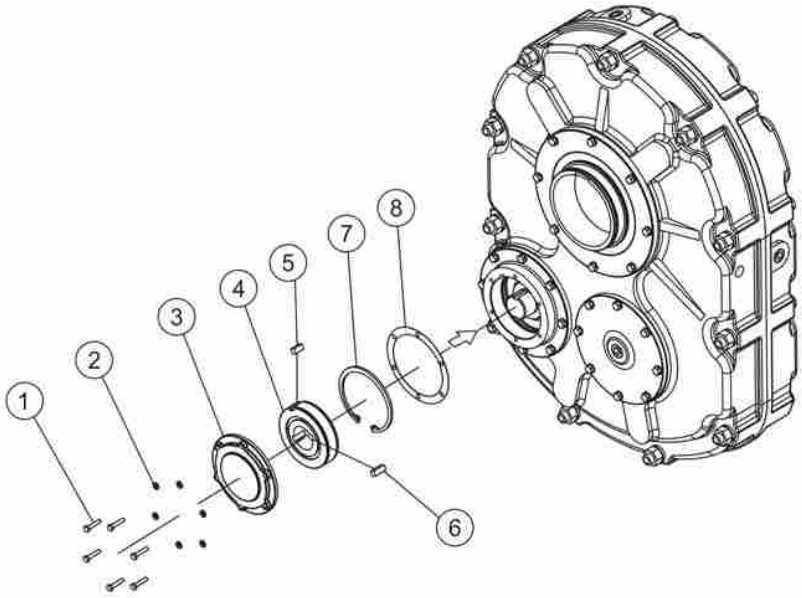

Assemblies - Backstop

Step 1 : Remove backstop cover and gasket from the gearbox.

Step 2 : (for size 9 only) put C-clip into housing's groove.

Step 3 : Determine the direction of required shaft rotation.
(Size 2 - 5 backstops don't have inner race, the rotation arrow is marked on the outer race, meaning the outer race's free direction; shaft direction is opposite in other words. Size 6 - 9 backstops have inner race, the rotation arrow is marked on the inner race, meaning the inner race's free direction as well as the shaft's free direction.)

Step 4 : Feed the backstop into the housing, feed the key into backstops outer race and housing's key ways. In case of backstops with inner race, feed another key into the backstsops inner race and the shafts key ways.

Step 5 : (for Size 6 only) put C-clip onto end side of shafts groove.

Step 6 : Install the end cover.

Step 7 : Refill oil.

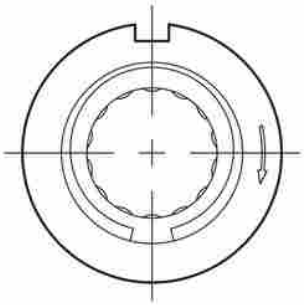

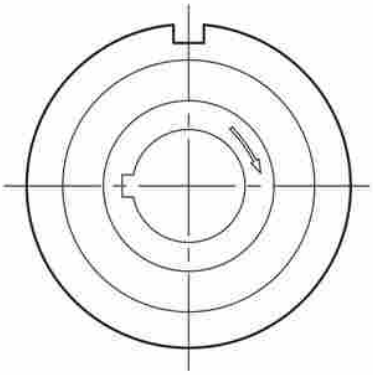

Step 1:
Please follow the sequence of gland seal, oil seal and seal retainer to complete the adapter assemblies.

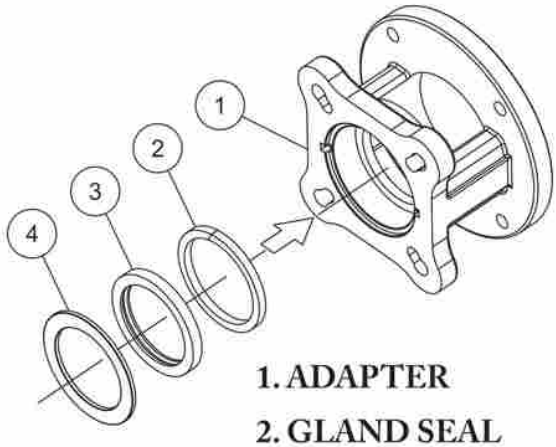

1. ADAPTER
2. GLAND SEAL
3. OIL SEAL
4. SEAL RETAINER

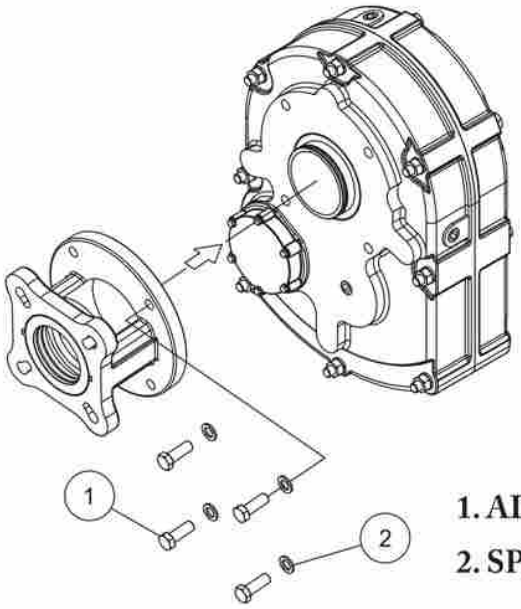

Step 2:
Please put adapter bolts through spring washers and then fasten the adapter kit onto the gearbox.

1. ADAPTER
2. SPRING WASHER

Step 3:
1. Strike the key onto the drive shaft.
2. Put the drive shaft through the follow bore of gearbox.
3. Put the bushing in hollow bore from end side.
4. Put the bolt through the washer and retainer before fasten onto the end side of drive shaft.

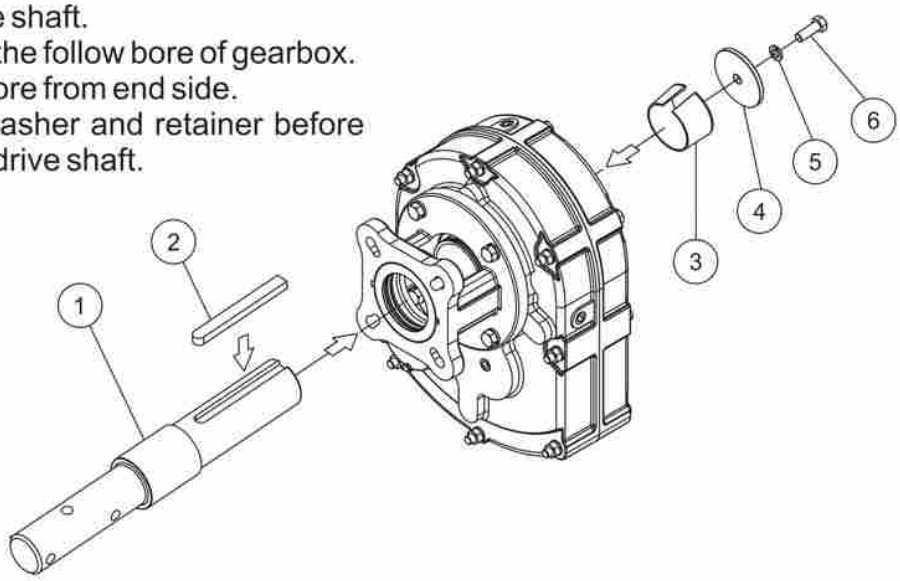

1. DRIVE SHAFT
2. KEY
3. BUSHING
4. SHAFT RETAINER
5. SPRING WASHER
6. BOLT

Application of Shaft Mount Gear Reducers

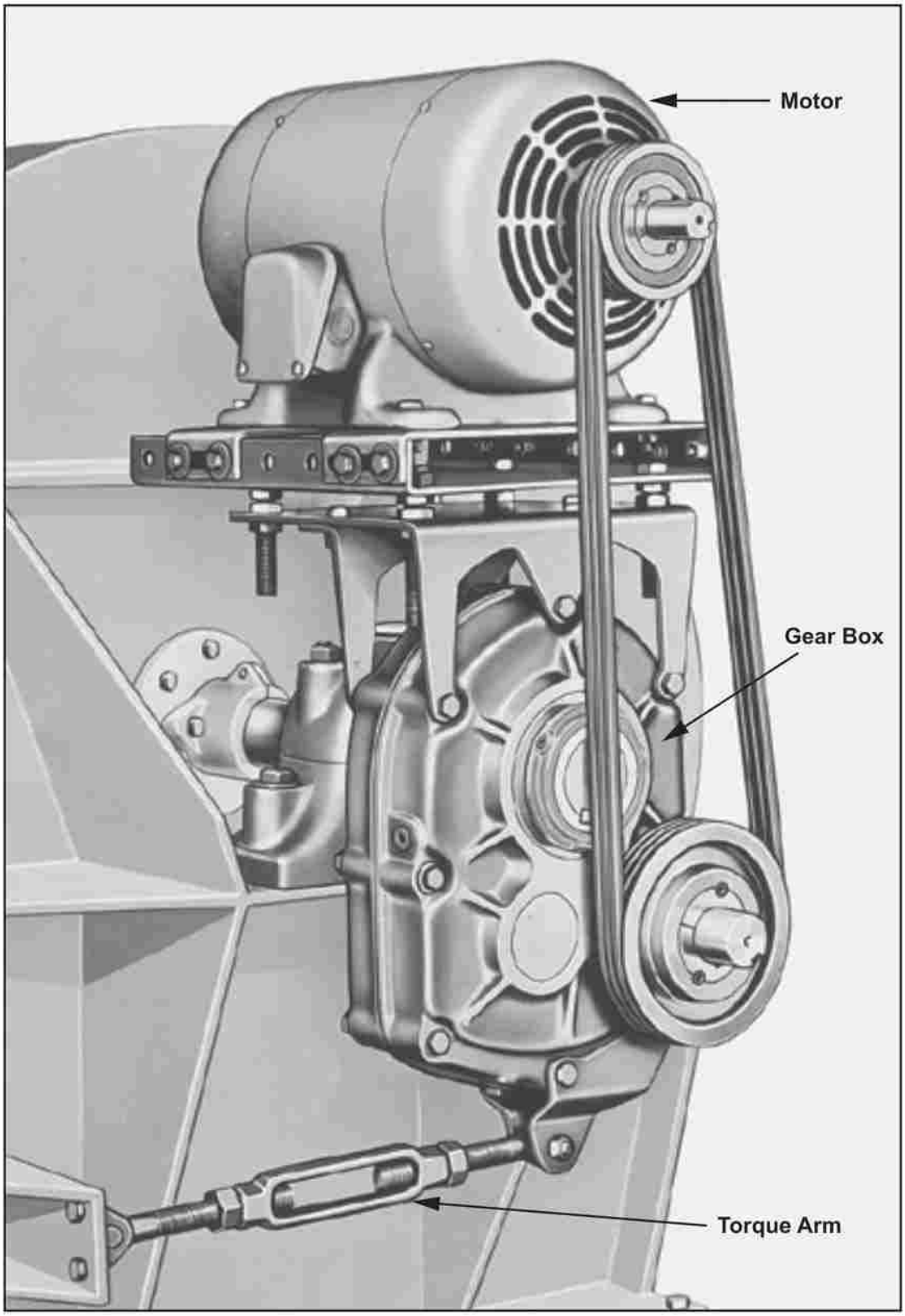

SMR SERIES

SHAFT MOUNT GEAR REDUCERS

CHENTA GEAR 成大齒輪

HELICAL BEVEL GEAR
(K Series)

HELICAL WORM GEAR

HELICAL GEAR
(MVF)

HELICAL GEAR
(MHF)

HOLLOW SHAFT GEAR

CHENTA PRECISION MACHINERY IND.INC.

WORM GEAR

SCREW JACK
(J Series)

PT CHENTA TRANSMISSION INDONESIA

Your trusted parter in reliable transmission solution

HEAD OFFICE

Jl. Rungkut Industri III/55, 60293 **Surabaya**

(031) 8497070

support@chentaindonesia.co.id

www.chentaindonesia.co.id